BNF™ BASIC

Adagio™ 280

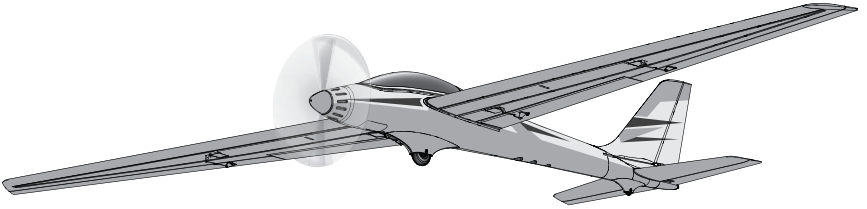

Instruction Manual
Bedienungsanleitung
Manuel d'utilisation
Manuale di Istruzioni

E-flite®
ADVANCING ELECTRIC FLIGHT

NOTICE

All instructions, warranties and other collateral documents are subject to change at the sole discretion of Horizon Hobby, LLC. For up-to-date product literature, visit www.horizonhobby.com and click on the support tab for this product.

Meaning of Special Language:

The following terms are used throughout the product literature to indicate various levels of potential harm when operating this product:

NOTICE: Procedures, which if not properly followed, create a possibility of physical property damage AND little or no possibility of injury.

CAUTION: Procedures, which if not properly followed, create the probability of physical property damage AND a possibility of serious injury.

WARNING: Procedures, which if not properly followed, create the probability of property damage, collateral damage, and serious injury OR create a high probability of superficial injury.

⚠ **WARNING:** Read the ENTIRE instruction manual to become familiar with the features of the product before operating. Failure to operate the product correctly can result in damage to the product, personal property and cause serious injury.

This is a sophisticated hobby product. It must be operated with caution and common sense and requires some basic mechanical ability. Failure to operate this product in a safe and responsible manner could result in injury or damage to the product or other property. This product is not intended for use by children without direct adult supervision. Do not use with incompatible components or alter this product in any way outside of the instructions provided by Horizon Hobby, LLC. This manual contains instructions for safety, operation and maintenance. It is essential to read and follow all the instructions and warnings in the manual, prior to assembly, setup or use, in order to operate correctly and avoid damage or serious injury.

WARNING AGAINST COUNTERFEIT PRODUCTS: If you ever need to replace your Spektrum receiver found in a Horizon Hobby product, always purchase from Horizon Hobby, LLC or a Horizon Hobby authorized dealer to ensure authentic high-quality Spektrum product. Horizon Hobby, LLC disclaims all support and warranty with regards, but not limited to, compatibility and performance of counterfeit products or products claiming compatibility with DSM or Spektrum.

Age Recommendation: Not for children under 14 years. This is not a toy.

Safety Precautions and Warnings

- Always keep a safe distance in all directions around your model to avoid collisions or injury. This model is controlled by a radio signal subject to interference from many sources outside your control. Interference can cause momentary loss of control.
- Always operate your model in open spaces away from full-size vehicles, traffic and people.
- Always carefully follow the directions and warnings for this and any optional support equipment (chargers, rechargeable battery packs, etc.).
- Always keep all chemicals, small parts and anything electrical out of the reach of children.
- Always avoid water exposure to all equipment not specifically designed and protected for this purpose. Moisture causes damage to electronics.
- Never place any portion of the model in your mouth as it could cause serious injury or even death.
- Never operate your model with low transmitter batteries.
- Always keep aircraft in sight and under control.
- Always use fully charged batteries.
- Always keep the transmitter powered on while aircraft is powered.
- Always remove batteries before disassembly.
- Always keep moving parts clean.
- Always keep parts dry.
- Always let parts cool after use before touching.
- Always remove batteries after use.
- Always ensure failsafe is properly set before flying.
- Never operate aircraft with damaged wiring.
- Never touch moving parts.

Box Contents

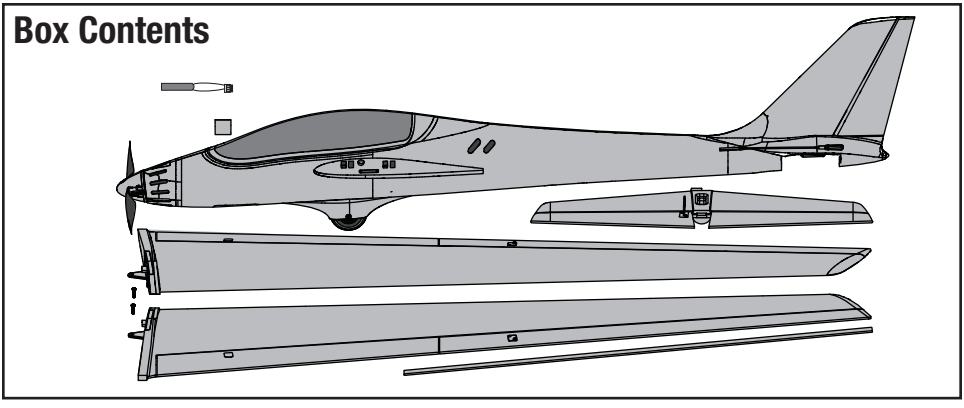

Table of Contents

Preflight Checklist....4
Wing Installation....4
Horizontal Tail Installation....5
Low Voltage Cutoff (LVC)....5
Transmitter and Receiver Binding....6
Battery Installation....7
ESC Arming....7
Control Direction Test....8
Control Centering....8
Control Horn and Servo Arm Settings....8
Dual Rates....9
Center of Gravity (CG)....9
Flying Tips and Repairs....10
Post Flight Checklist....11
Service of Power Components....11
Troubleshooting Guide....12
Limited Warranty....13
Warranty and Service Contact Information....14
FCC Information....14
Compliance Information for the European Union..14
Replacement Parts....54
Optional Parts and Accessories....55

Specifications

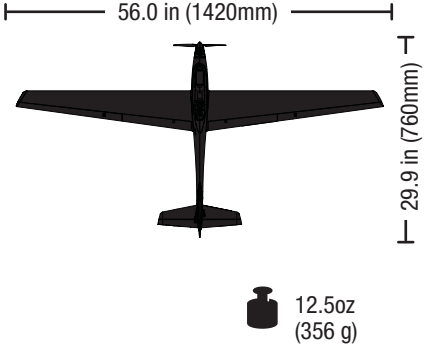

Installed

- BL 280 Outrunner Motor, 1260Kv (EFLM7011)
- BL Controller, 10A (EFLA7300BR)
- AR6335 6-Channel AS3X® Nanolite Receiver, Air (SPMAR6335)
- (6) 3.5 g Digital Servo (EFLR7100)

Need to Complete

- 450mAh 3S 11.1V 30C Li-Po, 18AWG JST (EFLB4503SJ30)
- **Recommended Battery Charger:** Prophet™ Sport Plus 50W AC DC Charger (DYNC2010CA)
- **Recommended Transmitter:** Full Range DSM2®/DSMX® technology with adjustable dual rate and exponential (DX4e and up)

To register your product online, go to www.e-fliterc.com

Preflight Checklist

✓	
	1. Charge flight battery.
	2. Install flight battery in aircraft (once it has been fully charged).
	3. Bind aircraft to transmitter.
	4. Make sure linkages move freely.
	5. Perform Control Direction Test with transmitter.

✓	
	6. Adjust center of gravity.
	7. Perform a radio system Range Check.
	8. Find a safe and open area.
	9. Plan flight for flying field conditions.

Wing Installation

1. Remove the canopy hatch before installing the wings.

2. Slide the wing tube (**A**) into the fuselage.

3. Install the left and right wing (**B** and **C**) over the wing tube and into the wing slot of the fuselage while inserting the aileron and flap servo connectors through the provided holes.

Tip: If needed, use hemostats or pliers to pull the servo connectors into the fuselage.

CAUTION: DO NOT crush or otherwise damage the wiring when attaching the wing to the fuselage.

4. Connect the aileron servos from the wings to the Y-harness connectors in the fuselage. The left and right aileron servos can be connected to either side of the Y-harness.

IMPORTANT: Correct operation of the AS3X system requires connection of both ailerons to the included Y-harness and the AILE channel of the receiver.

5. Connect the flap servos from the wings to the Y-harness connectors in the fuselage. The left and right flap servos can be connected to either side of the Y-harness.

6. Secure the left and right wings to the fuselage using the 2 included screws (**D**).

7. Replace the canopy on the fuselage.

When needed, disassemble in reverse order.

NOTICE: When disconnecting the servo connectors, do not pull on the servo wires. Use a screwdriver or pliers to break the friction fit of the servo connectors. Failure to do so could result in damage to the servo wiring.

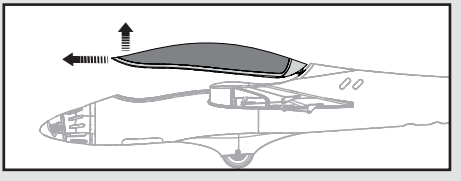

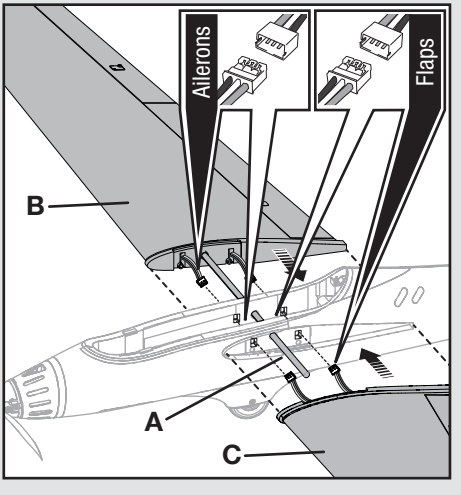

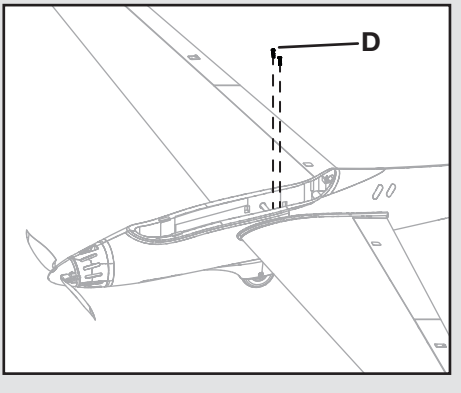

Horizontal Tail Installation

Required Adhesives:

Medium CA

1. Apply a small amount of CA (cyanoacrylate adhesive) glue to the channel in the top of the horizontal tail.

IMPORTANT: Keep glue away from the elevator hinge.

2. Insert the tail wheel housing and the tail in the slots in the rear of the fuselage.

3. Connect the elevator clevis (**A**) to the control horn (**B**). Refer to the Control Horn and Servo Arm Settings for correct connection.

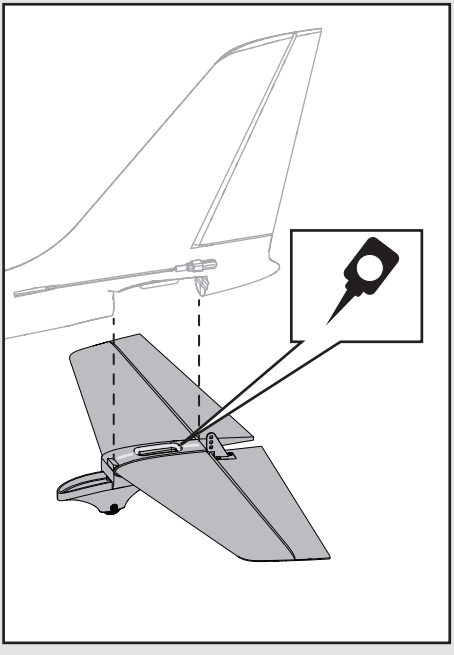

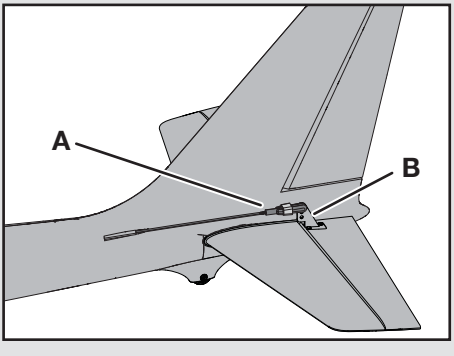

Low Voltage Cutoff (LVC)

When a Li-Po battery is discharged below 3V per cell, it will not hold a charge. The aircraft's ESC protects the flight battery from over-discharge using Low Voltage Cutoff (LVC). Once the battery discharges to 3V per cell, the LVC will reduce the power to the motor in order to leave adequate power to the receiver and servos to land the airplane.

When the motor power decreases, land the aircraft immediately and replace or recharge the flight battery.

Always disconnect and remove the Li-Po battery from the aircraft after each flight. Charge your Li-Po battery to about half capacity before storage. Make sure the battery charge does not fall below 3V per cell. Failure to unplug a connected battery will result in trickle discharge.

For your first flights, set your transmitter timer or a stopwatch to 6 minutes. Adjust your timer for longer or shorter flights once you have flown the model. Flights of 10 minutes are achievable if using proper throttle management.

NOTICE: Repeated flying to LVC will damage the battery.

Transmitter and Receiver Binding

Binding is the process of programming the receiver to recognize the GUID (Globally Unique Identifier) code of a single specific transmitter. You need to 'bind' your chosen Spektrum™ DSM2/DSMX technology equipped aircraft transmitter to the receiver for proper operation.

Any full range Spektrum DSM2/DSMX transmitter can bind to the DSM2/DSMX receiver. Please visit www.bindnfly.com for a complete list of compatible transmitters.

Important: Before binding a non-computerized transmitter, ensure all servo reversing is set to normal and trim is at center. Before binding a computerized transmitter, choose a blank model memory with only default (zero) settings. Select 1 aileron, 1 flap for the wing type.

Failure to do so could affect flight performance.

✓ Binding Procedure
1. Refer to your transmitter's unique instructions for binding to a receiver (location of transmitter's Bind control).
2. Make sure the flight battery is disconnected from the aircraft.
3. Power off the transmitter.
4. Bind the AR6335 receiver to a DSM2/DSMX transmitter by inserting a bind plug in the bind port of the receiver.
5. Connect the flight battery to the aircraft. The receiver LED will begin to flash rapidly (typically after 5 seconds).
6. Ensure that control surface trims are centered and the throttle and throttle trims are in the low position to correctly set the failsafe.
7. Put your transmitter into bind mode. Refer to your transmitter's manual for binding button or switch instructions.
8. Keep the aircraft immobile out of the wind and, after 5 to 10 seconds, the receiver status LED will become solid, indicating that the receiver is bound to the transmitter. If the LED does not turn solid, refer to the Troubleshooting Guide at the back of the manual.
9. Remove the bind plug from the receiver and store it in a safe place. If the plug is difficult to remove, carefully use pliers or a screwdriver to overcome the friction fit.

For subsequent flights, power on the transmitter before connecting the flight battery.

⚠ **CAUTION:** When using a Futaba transmitter with a Spektrum DSM® module, you must reverse the throttle channel and rebind. Refer to your Spektrum module manual for binding and failsafe instructions. Refer to your Futaba transmitter manual for instructions on reversing the throttle channel.

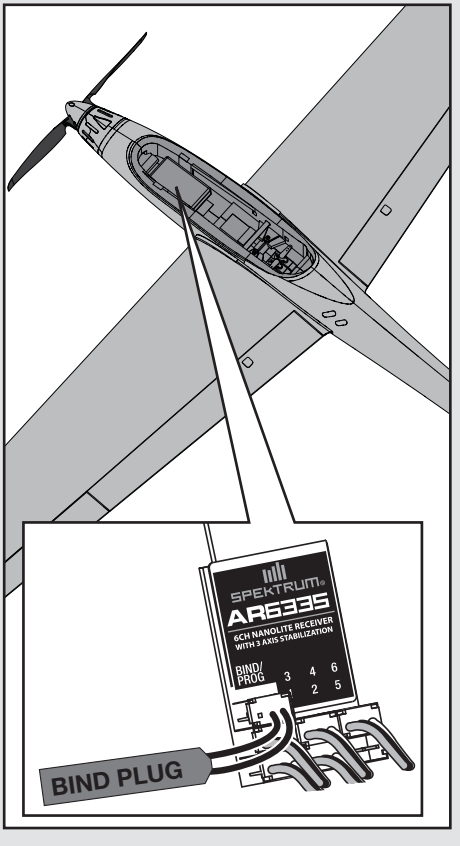

Battery Installation

1. Remove the canopy.
2. Apply the included loop tape to the bottom of the battery.
3. Install the battery (**A**) in the battery cavity towards the front of the fuselage. **Refer to the Center of Gravity instructions for the battery's position.**
4. Connect the fully charged flight battery to the ESC. **Refer to the ESC Arming instructions for correct connection of the battery to the ESC.**
5. Replace the canopy on the fuselage.

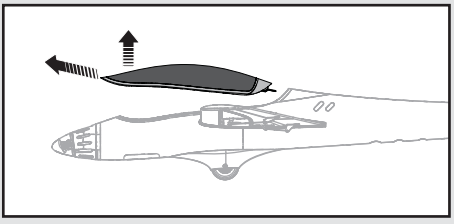

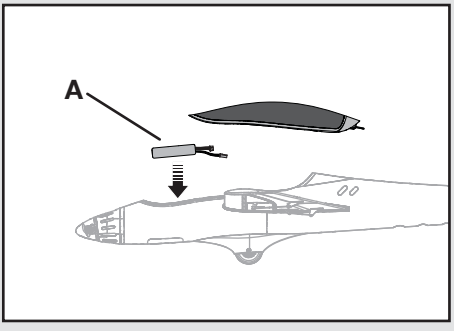

⚠ **CAUTION:** Always disconnect the Li-Po battery from the ESC when not flying to avoid over-discharging the battery. Batteries discharged to a voltage lower than the lowest approved voltage may become damaged, resulting in loss of performance and potential fire when batteries are charged.

ESC Arming

Arming the ESC also occurs after binding as previously described, but subsequent connection of a flight battery requires the steps to the right.

Tip: If the ESC sounds a continuous double beep after the flight battery is connected, recharge or replace the battery.

If you accidentally connect the battery while the throttle is opened or the throttle trim is high, a musical tone will sound after 5 seconds and the ESC will not arm until the throttle is returned to the off position or the throttle trim is lowered.

⚠ **CAUTION:** Always keep hands away from the propeller. When armed, the motor will turn the propeller in response to any throttle movement.

1 Lower throttle and throttle trim to lowest settings.

Power ON the transmitter.

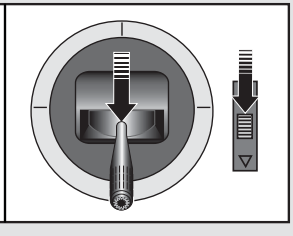

2 Remove the canopy and install the battery in the battery cavity, then connect the battery to the ESC, noting proper polarity.

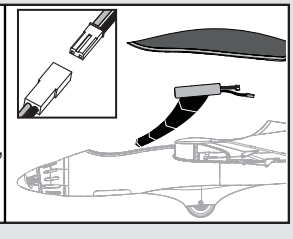

3 Keep the aircraft immobile and away form wind for 5 seconds.

Series of tones

Continuous receiver LED.

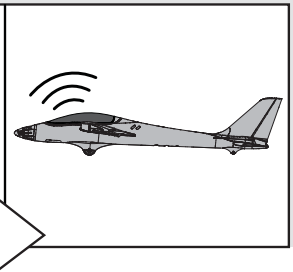

FLY...

Control Direction Test

Bind your aircraft and transmitter before doing these tests. Move the controls on the transmitter to make sure the aircraft control surfaces move correctly and in the proper direction.

Always keep throttle at the low position during testing.

Make sure the tail linkages move freely and that paint or decals are not adhered to them.

Control Centering

Before the first flights, or in the event of an accident, make sure the flight control surfaces are centered. Adjust the linkages mechanically if the control surfaces are not centered.

1. Reset sub-trims to zero. Ensure the servo arms are as perpendicular to the servo case as possible. Use sub-trim to fine-tune as needed.
2. When an adjustment of linkages is needed, pull the tube from the clevis to the linkage.
3. Carefully spread the clevis and adjust the length of the linkage by screwing the clevis in or out. Reattach the clevis in the proper hole in the control horn.
4. Move the tube to tighten the clevis onto the control horn.

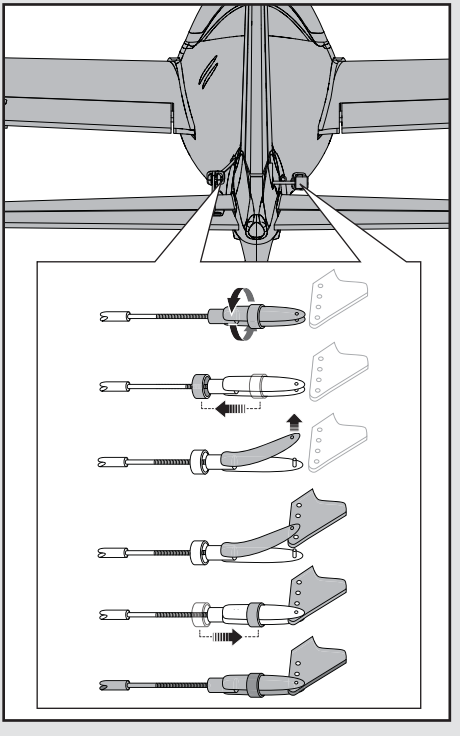

Centering Controls After First Flights

For best performance with AS3X, it is important that excessive trim is not used.

If the model requires excessive transmitter trim (4 or more clicks of trim per channel), return the transmitter trim to zero and adjust the linkages mechanically so that the control surfaces are in the flight trimmed position.

Control Horn and Servo Arm Settings

This illustration shows the factory settings for linkages on the control horns and servo arms. After flying, you may choose to adjust the linkage positions for the desired control response.

	Horns	Servo Arms
Elevator	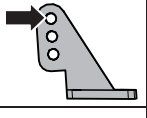	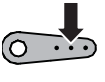
Rudder		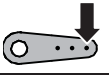
Ailerons		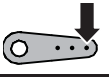
Flaps		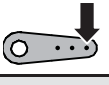

Dual Rates

We recommend using a DSM2/DSMX radio capable of dual rates. The settings to the right are recommended starting settings for intermediate pilots. Adjust according to individual preferences after the initial flight.

Tip: For the first flight, fly the model at **LOW RATE.**

		High Rate	Low Rate
Dual Rates	Aileron	14mm ▲ / ▼	10mm ▲ / ▼
	Elevator	8mm ▲ / ▼	6mm ▲ / ▼
	Rudder	16mm ▲ / ▼	12mm ▲ / ▼

		Half	Full
Flaps		15mm	30mm

Center of Gravity (CG)

The CG location is **42–44mm** back from the leading edge of the wing at the wing root.

The battery compartment is oversized to allow for Center of Gravity adjustment. Start by installing the battery fully forward with the connectors facing the front of the aircraft. Adjust as needed by sliding the battery back.

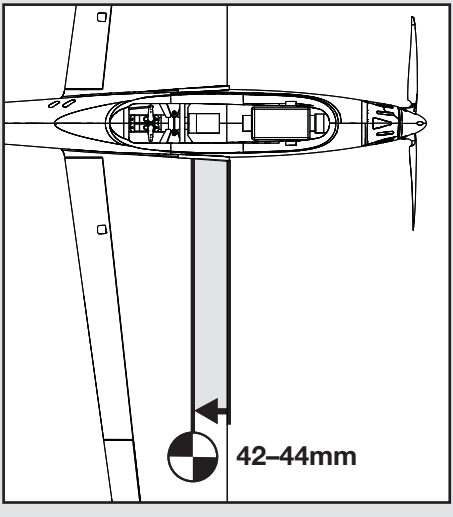

Flying Tips and Repairs

Consult local laws and ordinances before choosing a location to fly your aircraft.

We recommend flying your aircraft outside in no greater than moderate winds.

Always avoid flying near houses, trees, wires and buildings. You should also be careful to avoid flying in areas where there are many people, such as busy parks, schoolyards or soccer fields.

Range Check Your Radio System

After final assembly, range check the radio system with the aircraft. Refer to your specific transmitter and receiver instruction manuals for range test information.

Flying

This motor glider is capable of aerobatics, such as loops and rolls. However, avoid prolonged, steep dives. Manage the energy of descent without going top speed.

Hand Launching

When hand-launching your aircraft alone, hold the aircraft in one hand and the transmitter in the other.

Apply about 1/2–3/4 throttle. Hold the aircraft on the underside and throw the aircraft directly into the wind, angled slightly up (5 to 10 degrees above the horizon). Climb to check the trim. Once the trim is adjusted, begin exploring the flight envelope of the aircraft.

Soaring

Your aircraft can ascend on thermals and other updrafts to prolong its flight. There are many ways to stay aloft with a sailplane, such as ridge lifts and thermals.

A thermal is simply a column of rising warm air. Once you get your aircraft into the air, watch your aircraft for a response to thermals. If the airplane randomly rolls on its own, it is likely that you only flew through the edge of the thermal, causing one side of the airplane to rise, rather than the entire airplane. Enter the thermal by turning your aircraft directly into it, circling to stay in the center of the thermal. Slow your forward speed by increasing up elevator trim so that your aircraft is moving just faster than stall (minimum sink speed). Make easy banking turns to find the area of highest lift (the thermal's core).

When you find the core of lift, tighten your turns to stay near this position. Sometimes thermals drift downwind. It is best that you search for thermals upwind, so that you can follow a thermal downwind if it is pushed downwind. With practice, you will find it easier to locate and anticipate the movement of thermals. Although thermals cannot be seen, you can see dust, insects or birds riding an updraft. Air movement of a thermal may be felt, so movement in an otherwise calm spot may show you the location of a nearby thermal. A shift in the wind (in a light breeze) can be airflow into a thermal.

Flaps

During landing, the flaps allow a landing approach to be steeper because of the increased drag. Flaps make the aircraft come in at a slower airspeed and make it easier to flare and settle in for a smooth landing.

Landing

Make sure to land on a soft surface, like grass. Fly the aircraft into the wind approximately 36 inches (90cm) or less above the surface. During flare, keep the wings level and the aircraft pointed into the wind. Gently pull back on the elevator to bring the aircraft down on its main wheel. Fully lower the throttle just before the aircraft lands to avoid propeller damage.

NOTICE: If a crash is imminent, reduce the throttle fully. Failure to do so could result in extra damage to the airframe, as well as damage to the ESC and motor.

NOTICE: Crash damage is not covered under warranty.

Repairs

Repair this aircraft using CA (cyanoacrylate adhesive) glue or clear tape.

When parts are not repairable, see the Replacement Parts List for ordering by item number.

For a listing of all replacement and optional parts, refer to the list at the back of this manual.

NOTICE: Use of CA accelerant on your aircraft can damage paint. DO NOT handle the aircraft until accelerant fully dries.

NOTICE: When you are finished flying, never leave the aircraft in direct sunlight or in a hot, enclosed area such as a car. Doing so can damage the foam.

Post Flight Checklist

✓	
	1. Disconnect flight battery from ESC (Required for safety and battery life).
	2. Power off transmitter.
	3. Remove flight battery from aircraft.
	4. Recharge flight battery.

✓	
	5. Store flight battery apart from aircraft and monitor the battery charge.
	6. Make note of flight conditions and flight plan results, planning for future flights.

Service of Power Components

Disassembly

CAUTION: Always disconnect the battery before handling or adjusting the propeller or motor. Failure to do so could result in personal injury.

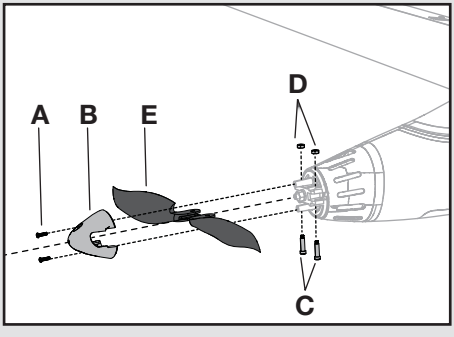

Propeller

1. Remove the 2 screws (**A**) from the spinner (**B**). Carefully separate the spinner from the back plate.
2. Remove 2 bolts (**C**), 2 nuts (**D**) and 2 propeller blades (**E**) from the back plate.
3. Remove the lock nut (**F**) from the propeller shaft, then remove the back plate (**G**).
4. Loosen the 2 setscrews (**H**) and remove the propeller shaft (**I**) from the motor.

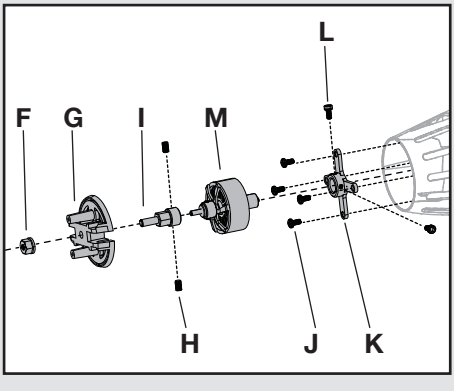

Motor and Firewall

1. Remove the 4 screws (**J**) and motor mount (**K**) from the fuselage.
2. Disconnect the motor wires from the ESC.
3. Loosen the 2 setscrews (**L**) and remove the motor (**M**) from the motor mount.

Assemble in reverse order.

Assembly Tips

- Correctly align and connect the motor wire colors with the ESC wires.
- Ensure the propeller blades swing freely in the spinner back plate.
- Tools are required to loosen or tighten the setscrews and the lock nut.
- Ensure the spinner is fully connected to the spinner back plate for safe operation.

Troubleshooting Guide

Problem	Possible Cause	Solution
Aircraft will not respond to throttle but responds to other controls	ESC did not arm because throttle stick and/or throttle trim too high	Lower throttle stick and throttle trim to lowest setting
	Throttle channel is reversed	Reverse throttle channel on transmitter
	Motor disconnected from ESC	Make sure motor is connected to the ESC
	Servo travel setup is less than 100%	Adjust servo travel to 100% or slightly greater
Extra propeller noise or extra vibration	Damaged propeller, spinner or motor	Replace damaged parts
	Prop nut is too loose	Tighten the prop nut
	Prop is out of balance	Remove and balance propeller, or replace with a balanced propeller
	Spinner is not tight or fully seated in place	Tighten the spinner or remove the spinner and turn it 180 degrees
Reduced flight time or aircraft underpowered	Flight battery charge is low	Completely recharge flight battery
	Propeller installed incorrectly	Install propeller properly
	Flight battery damaged	Replace flight battery and follow flight battery instructions
	Flight battery is too cold	Make sure battery is warm before use
	Battery capacity too low for power drawn	Replace battery or use a larger capacity battery
Aircraft will not Bind (during binding) to transmitter	Transmitter too near aircraft during binding process	Power off transmitter, move transmitter a larger distance from aircraft, disconnect and reconnect flight battery to aircraft and follow binding instructions
	Bind switch or button not held long enough during bind process	Power off transmitter and repeat bind process. Hold transmitter bind button or switch until receiver is bound
	Flight battery/Transmitter battery charge is too low	Replace/recharge batteries
	The bind plug is not installed correctly in the bind port	Install bind plug in bind port and bind the aircraft to the transmitter
	Aircraft or transmitter is too close to large metal object, wireless source or another transmitter	Move aircraft and transmitter to another location and attempt binding again
Aircraft will not connect (after binding) to transmitter	Transmitter too close to aircraft during connecting process	Power off transmitter, move transmitter a larger distance from aircraft, disconnect and reconnect flight battery to aircraft
	Flight battery/Transmitter battery charge is too low	Replace/recharge batteries
	Aircraft bound to different model memory (ModelMatch™ radios only)	Select correct model memory on transmitter
	Transmitter may have been bound to a different aircraft using different DSM protocol	Bind aircraft to transmitter
	Bind plug left installed in bind port	Rebind transmitter to the aircraft and remove the bind plug before cycling power
	Aircraft or transmitter is too close to large metal object, wireless source or another transmitter	Move aircraft and transmitter to another location and attempt connecting again
Control surface does not move	Control surface, control horn, linkage or servo damage	Replace or repair damaged parts and adjust controls
	Servo wire damaged or connections loose	Do a check of wires and connections, connect or replace as needed
	Flight battery charge is low	Fully recharge flight battery
	Control linkage does not move freely	Make sure control linkage moves freely
Controls reversed	Transmitter settings reversed	Adjust controls on transmitter appropriately
Motor power quickly decreases and increases then motor loses power	Battery voltage is down to the point of receiver/ESC Low Voltage Cutoff (LVC)	Recharge flight battery or replace battery that is no longer performing

Limited Warranty

What this Warranty Covers
Horizon Hobby, LLC ("Horizon") warrants to the original purchaser that the product purchased (the "Product") will be free from defects in materials and workmanship at the date of purchase.

What is Not Covered
This warranty is not transferable and does not cover (i) cosmetic damage, (ii) damage due to acts of God, accident, misuse, abuse, negligence, commercial use, or due to improper use, installation, operation or maintenance, (iii) modification of or to any part of the Product, (iv) attempted service by anyone other than a Horizon Hobby authorized service center, (v) Product not purchased from an authorized Horizon dealer, or (vi) Product not compliant with applicable technical regulations.

OTHER THAN THE EXPRESS WARRANTY ABOVE, HORIZON MAKES NO OTHER WARRANTY OR REPRESENTATION, AND HEREBY DISCLAIMS ANY AND ALL IMPLIED WARRANTIES, INCLUDING, WITHOUT LIMITATION, THE IMPLIED WARRANTIES OF NON-INFRINGEMENT, MERCHANTABILITY AND FITNESS FOR A PARTICULAR PURPOSE. THE PURCHASER ACKNOWLEDGES THAT THEY ALONE HAVE DETERMINED THAT THE PRODUCT WILL SUITABLY MEET THE REQUIREMENTS OF THE PURCHASER'S INTENDED USE.

Purchaser's Remedy
Horizon's sole obligation and purchaser's sole and exclusive remedy shall be that Horizon will, at its option, either (i) service, or (ii) replace, any Product determined by Horizon to be defective. Horizon reserves the right to inspect any and all Product(s) involved in a warranty claim. Service or replacement decisions are at the sole discretion of Horizon. Proof of purchase is required for all warranty claims. SERVICE OR REPLACEMENT AS PROVIDED UNDER THIS WARRANTY IS THE PURCHASER'S SOLE AND EXCLUSIVE REMEDY.

Limitation of Liability
HORIZON SHALL NOT BE LIABLE FOR SPECIAL, INDIRECT, INCIDENTAL OR CONSEQUENTIAL DAMAGES, LOSS OF PROFITS OR PRODUCTION OR COMMERCIAL LOSS IN ANY WAY, REGARDLESS OF WHETHER SUCH CLAIM IS BASED IN CONTRACT, WARRANTY, TORT, NEGLIGENCE, STRICT LIABILITY OR ANY OTHER THEORY OF LIABILITY, EVEN IF HORIZON HAS BEEN ADVISED OF THE POSSIBILITY OF SUCH DAMAGES. Further, in no event shall the liability of Horizon exceed the individual price of the Product on which liability is asserted. As Horizon has no control over use, setup, final assembly, modification or misuse, no liability shall be assumed nor accepted for any resulting damage or injury. By the act of use, setup or assembly, the user accepts all resulting liability. If you as the purchaser or user are not prepared to accept the liability associated with the use of the Product, purchaser is advised to return the Product immediately in new and unused condition to the place of purchase.

Law
These terms are governed by Illinois law (without regard to conflict of law principals). This warranty gives you specific legal rights, and you may also have other rights which vary from state to state. Horizon reserves the right to change or modify this warranty at any time without notice.

WARRANTY SERVICES
Questions, Assistance, and Services
Your local hobby store and/or place of purchase cannot provide warranty support or service. Once assembly, setup or use of the Product has been started, you must contact your local distributor or Horizon directly. This will enable Horizon to better answer your questions and service you in the event that you may need any assistance. For questions or assistance, please visit our website at www.horizonhobby.com, submit a Product Support Inquiry, or call the toll free telephone number referenced in the Warranty and Service Contact Information section to speak with a Product Support representative.

Inspection or Services
If this Product needs to be inspected or serviced and is compliant in the country you live and use the Product in, please use the Horizon Online Service Request submission process found on our website or call Horizon to obtain a Return Merchandise Authorization (RMA) number. Pack the Product securely using a shipping carton. Please note that original boxes may be included, but are not designed to withstand the rigors of shipping without additional protection. Ship via a carrier that provides tracking and insurance for lost or damaged parcels, as Horizon is not responsible for merchandise until it arrives and is accepted at our facility. An Online Service Request is available at http://www.horizonhobby.com/content/_service-center_render-service-center. If you do not have internet access, please contact Horizon Product Support to obtain a RMA number along with instructions for submitting your product for service. When calling Horizon, you will be asked to provide your complete name, street address, email address and phone number where you can be reached during business hours. When sending product into Horizon, please include your RMA number, a list of the included items, and a brief summary of the problem. A copy of your original sales receipt must be included for warranty consideration. Be sure your name, address, and RMA number are clearly written on the outside of the shipping carton.

NOTICE: Do not ship LiPo batteries to Horizon. If you have any issue with a LiPo battery, please contact the appropriate Horizon Product Support office.

Warranty Requirements
For Warranty consideration, you must include your original sales receipt verifying the proof-of-purchase date. Provided warranty conditions have been met, your Product will be serviced or replaced free of charge. Service or replacement decisions are at the sole discretion of Horizon.

Non-Warranty Service
Should your service not be covered by warranty, service will be completed and payment will be required without notification or estimate of the expense unless the expense exceeds 50% of the retail purchase cost. By submitting the item for service you are agreeing to payment of the service without notification. Service estimates are available upon request. You must include this request with your item submitted for service. Non-warranty service estimates will be billed a minimum of ½ hour of labor. In addition you will be billed for return freight. Horizon accepts money orders and cashier's checks, as well as Visa, MasterCard, American Express, and Discover cards. By submitting any item to Horizon for service, you are agreeing to Horizon's Terms and Conditions found on our website http://www.horizonhobby.com/content/_service-center_render-service-center.

ATTENTION: Horizon service is limited to Product compliant in the country of use and ownership.

If received, a non-compliant Product will not be serviced. Further, the sender will be responsible for arranging return shipment of the un-serviced Product, through a carrier of the sender's choice and at the sender's expense. Horizon will hold non-compliant Product for a period of 60 days from notification, after which it will be discarded.

Warranty and Service Contact Information

Country of Purchase	Horizon Hobby	Phone Number/Email Adress	Address
United States of America	**Horizon Service Center** (Repairs and Repair Requests)	servicecenter.horizonhobby.com/RequestForm/	4105 Fieldstone Rd Champaign, Illinois 61822 USA
	Horizon Product Support (Product Technical Assistance)	www.quickbase.com/db/bghj7ey8c?a=GenNewRecord 888-959-2305	
	Sales	sales@horizonhobby.com 888-959-2305	
United Kingdom	**Service/Parts/Sales:** Horizon Hobby Limited	sales@horizonhobby.co.uk +44 (0) 1279 641 097	Units 1–4 , Ployters Rd, Staple Tye Harlow, Essex, CM18 7NS, United Kingdom
Germany	**Horizon Technischer Service**	service@horizonhobby.de	Christian-Junge-Straße 1 25337 Elmshorn, Germany
	Sales: Horizon Hobby GmbH	+49 (0) 4121 2655 100	
France	**Service/Parts/Sales:** Horizon Hobby SAS	infofrance@horizonhobby.com +33 (0) 1 60 18 34 90	11 Rue Georges Charpak 77127 Lieusaint, France
China	**Service/Parts/Sales:** Horizon Hobby – China	info@horizonhobby.com.cn +86 (021) 5180 9868	Room 506, No. 97 Changshou Rd. Shanghai, China 200060

FCC Information

Operation is subject to the following two conditions: (1) This device may not cause harmful interference, and (2) this device must accept any interference received, including interference that may cause undesired operation.

CAUTION: Changes or modifications not expressly approved by the party responsible for compliance could void the user's authority to operate the equipment.

This product contains a radio transmitter with wireless technology which has been tested and found to be compliant with the applicable regulations governing a radio transmitter in the 2.400GHz to 2.4835GHz frequency range.

IC Information

This device complies with Industry Canada licence-exempt RSS standard(s). Operation is subject to the following two conditions: (1) this device may not cause interference, and (2) this device must accept any interference, including interference that may cause undesired operation of the device.

Compliance Information for the European Union

Declaration of Conformity

(in accordance with ISO/IEC 17050-1)
No. HH2014060601

Product(s): Adagio 280 BNF Basic
Item Number(s): EFL6550
Equipment class: 1

The object of declaration described above is in conformity with the requirements of the specifications listed below, following the provisions of the European R&TTE directive 1999/5/EC and EMC Directive 2004/108/EC:

EN 301 489-1 V1.9.2: 2012
EN 301 489-17 V2.1.1: 2009
EN55022:2010 + AC:2011
EN55024:2010

Signed for and on behalf of:
Horizon Hobby, LLC
Champaign, IL USA
Jun 6, 2014

Rober Peak
Chief Financial Officer
Horizon Hobby, LLC

Instructions for disposal of WEEE by users in the European Union

This product must not be disposed of with other waste. Instead, it is the user's responsibility to dispose of their waste equipment by handing it over to a designated collections point for the recycling of waste electrical and electronic equipment. The separate collection and recycling of your waste equipment at the time of disposal will help to conserve natural resources and ensure that it is recycled in a manner that protects human health and the environment. For more information about where you can drop off your waste equipment for recycling, please contact your local city office, your household waste disposal service or where you purchased the product.

Replacement Parts – Ersatzteile –
– Pièces de rechange – Pezzi di ricambio –

Part # • Nummer Numéro • Codice	Description	Beschreibung	Description	Descrizione
EFL6501	Horizontal Stab: Adagio 280	E-flite Adagio 280: Höhenleitwerk m. Rad	Horizontal Stabilisateur: Adagio 280	Stabilizzatore orizzontale: Adagio 280
EFL6502	Hatch: Adagio 280	E-flite Adagio 280: Haube	Trappe: Adagio 280	Portello: Adagio 280
EFL6503	Prop and Spinner: Adagio 280	E-flite Adagio 280: Klapp-Propeller u. Spinner	Cône avec hélice: Adagio 280	Elica e ogiva: Adagio 280
EFL6504	Pushrods/Horns: Adagio 280	E-flite Adagio 280: Ruderhörner u. Gestänge	Tringlerie et guignols: Adagio 280	Rinvii/Squadrette: Adagio 280
EFL6505	Wing Tube: Adagio 280	E-flite Adagio 280: Tragflächenverbinder	Clé d'aile: Adagio 280	Tubo ala: Adagio 280
EFL6520	Wing Set: Adagio 280	E-flite Adagio 280: Tragflächenset	Aile: Adagio 280	Set ala: Adagio 280
EFL6567	Fuselage: Adagio 280	E-flite Adagio 280: Rumpf m. Rad	Fuselage: Adagio 280	Fusoliera: Adagio 280
EFLA7300BR	10-Amp Brushless ESC	E-flite 10-Amp Brushless ESC	Contrôleur brushless 10A	Regolatore (ESC) brushless 10A
EFLR7100	3.5 g Digital Sub-Micro Servo	E-flite 3.5g Digital Servo	Sub-micro servo digital 3.5g	Servo digitale submicro da 3,5g
EFLM7011	BL 280 Outrunner Motor, 1260Kv	E-flite BL 280 Außenläufer Motor 1260Kv	Moteur BL 280 à cage tournante, 1260Kv	BL 280 motore a cassa rotante, 1260Kv
SPMAR6335	AR6335 6-Channel AS3X Nanolite Receiver	Spektrum 6 Kanal Nanolite Empfänger AS3X	Récepteur AR6335 AS3X Nanolite 6 voies	AR6335 AS3XRicevitore Nanolite a 6 canali
EFL635012	Motor Shaft: Inverza 280 BNF	E-flite Inverza 280 BNF : Motorwelle	Axe moteur : Inverza 280 BNF	Albero motore: Inverza 280 BNF
EFLR710001	Gear Set: EFLR7100	E-flite Getriebe Set: EFLR7100	Jeu de pignons : EFLR7100	Set ingranaggi: EFLR7100
EFLR710002	Servo Arm Set: EFLR7100	E-flite Servo Arm Set: EFLR7100	Set de bras de servo : EFLR7100	Set squadrette servi: EFLR7100

– Optional Parts and Accessories –
– Optionale Bauteile und Zubehörteile –
– Pièces optionnelles et accessoires –
– Parti opzionali e accessori –

Part # • Nummer Numéro • Codice	Description	Beschreibung	Description	Descrizione
EFLA230	Charger Lead with JST Female	E-flite Ladekabel m/ JST Buchse	Câble de charge avec prise JST femelle	Cavo di carica con femmina JST
EFLA250	Park Flyer Tool Assortment, 5 pc	Park Flyer Werkzeugsortiment, 5 teilig	Assortiment d'outils park flyer, 5pc	Park Flyer assortimento attrezzi, 5 pc
DYN2803	Nut Driver: 5.5mm	Steckschlüssel 5.5mm	Clé à écrou 5.5mm	Chiave per dadi: 5.5mm
DYN2815	Hex Driver: 2mm	Dynamite Inbusschlüssel 2mm metrisch	Clé BTR 2mm	Chiave esagonale: 2mm
DYN2820	Hex Driver: .050"	Dynamite Inbusschlüssel ,050	Clé BTR .050"	Chiave esagonale: .050"
EFLB4503SJ50	450mAh 3S 11.1V 50C Li-Po, 18AWG JST	450mAh 3S 11.1V 50C Li-Po, 18AWG JST Akku	Batterie Li-Po 11.1V 3S 450mA 50C, 18AWG JST	Batteria Li-Po450mAh 3S 11.1V 50C, 18AWG JST
EFLB4503SJ30	450mAh 3S 11.1V 30C Li-Po, 18AWG JST	450mAh 3S 11.1V 30C Li-Po, 18AWG JST Akku	Batterie Li-Po 11.1V 3S 450mA 30C, 18AWG JST	Batteria Li-Po450mAh 3S 11.1V 30C, 18AWG JST
EFLB4303SJ	430mAh 3S 11.1V 20C LiPo,20AWG JST	430mAh 3S 11.1V 20C LiPo- Akku JST	Li-Po 11.1V 3S 430mA 20C, prise JST	430mAh 3S 11.1V 20C LiPo,20AWG JST
DYNC2010CA	Prophet Sport Plus 50W AC DC Charger	Dynamite Ladegerät Prophet Sport Plus 50W AC/DC EU	Chargeur Prophet Sport Plus 50W AC DC	Caricabatterie Prophet Sport Plus 50W AC DC
EFLA1010	10-Amp Pro Brushless ESC	E-flite 10-Amp Pro Brushless Regler	Contrôleur brushless 10A pro	ESC 10-Amp Pro Brushless
	DX4e DSMX 4-Channel Transmitter	DX4e DSMX 4-Kanal Sender	Emetteur DX4e DSMX 4 voies	DX4e DSMX Trasmettitore 4 canali
	DX5e DSMX 5-Channel Transmitter	DX5e DSMX 5-Kanal Sender	Emetteur DX5e DSMX 5 voies	DX5e DSMX Trasmettitore 5 canali
	DX6i DSMX 6-Channel Transmitter	DX6i DSMX 6-Kanal Sender	Emetteur DX6i DSMX 6 voies	DX6i DSMX Trasmettitore 6 canali
	DX6 DSMX 6-Channel Transmitter	DX6 DSMX 6-Kanal Sender	Emetteur DX6 DSMX 6 voies	DX6 DSMX Trasmettitore 6 canali
	DX7s DSMX 7-Channel Transmitter	Spektrum DX7s 7 Kanal Sender	Emetteur DX7s DSMX 7 voies	DX7s DSMX Trasmettitore 7 canali
	DX8 DSMX 8-Channel Transmitter	Spektrum DX8 nur Sender	Emetteur DX8 DSMX 8 voies	DX8 DSMX trasmettitore 8 canali
	DX9 DSMX 9-Channel Transmitter	Spektrum DX9 nur Sender	Emetteur DX9 DSMX 9 voies	DX9 DSMX trasmettitore 9 canali
	DX18 DSMX18 Channel Transmitter	Spektrum DX18 nur Sender	Emetteur DX18 DSMX 18 voies	DX18 DSMX trasmettitore 18 canali

© 2014 Horizon Hobby, LLC.

E-flite, Adagio, Prophet, DSM, DSM2, DSMX, AS3X, ModelMatch, and the BNF logo are trademarks or registered trademarks of Horizon Hobby, LLC.

The Spektrum trademark is used with permission of Bachmann Industries, Inc.

The trim scheme of the Adagio was designed by Mirco Pecorari of Aircraft Studio Design.

Futaba is a registered trademark of Futaba Denshi Kogyo Kabushiki Kaisha Corporation of Japan.

Patents pending.

www.e-fliterc.com

ADVANCING ELECTRIC FLIGHT

EFL6550 Created 05/14 44366